FIREMIKS®
THE SWEDISH ORIGINAL

FM APPROVED

DATA SHEET
FIREMIKS® 6000-3-PP-F-FA

PISTON PUMP TYPE FOR FIXED INSTALLATIONS

Approval: FM Class 5130, no PR470904

Water motor driven variable viscosity proportioner for firefighting. Dosing rate 3%. Used primarily in fixed installations connected to an atmospheric concentrate tank with gravity feed to Dosing pump (concentrate pump). Consists mainly of two volumetric parts: a Water motor and a Dosing pump.

Extinguishing water drives the multi-vane volumetric water motor, which in its turn drives the positive displacement concentrate piston/plunger pump (PP) that doses the correct amount of foam concentrate in the extinguishing water.

Correct dosing at system pressures from 4 to 16 bar and from min flow (see Min flow table page 2) up to 6000 lpm.

Equipped with a Manual air relief valve, (no 5 on Flow chart). Flushing of Dosing pump is done automatically, while water is flowing, when the concentrate inlet is closed with Dosing/Flushing valve, (no 4 on Flow chart). Water motor available in two different materials, Hard-anodized Aluminium or bare Nickel-aluminium Bronze. Equipped with Flap check valve on Dosing pump inlet (no 10 on Flow chart).

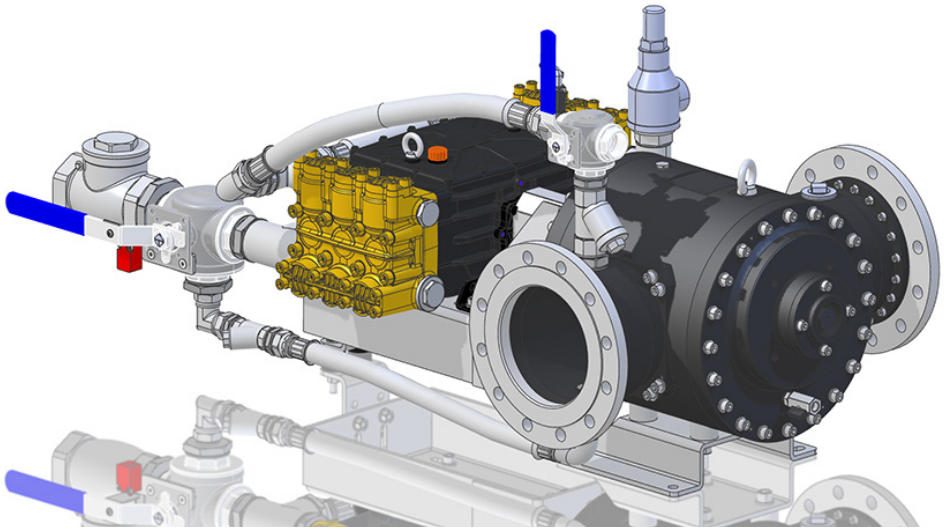

Note: Showing optional DRV valve with PRV and aluminium water motor, incl. integrated flanges. For illustration only, refer to Dimensional Drawing for accurate representation.

PRODUCT NO

Water motor material	Product No
Aluminium, Hard-anodized:	6000-3-PP-F-FA-ALU
Ni-Al Bronze:	6000-3-PP-F-FA-BRZ

INSTRUCTION AND OPERATING MANUAL (IOM)

This document must be followed in its entirety if this Data sheet is to be valid:
Instruction and Operating Manual FIREMIKS FM Approved - SPFA-FM2, Rev: 2541

For information on our FM approval, go to www.approvalguide.com

TECHNICAL DATA

Nominal dosing rate:	3% (approved range 3,0 - 3,9%)	
Min and max water inlet operating pressure:	4 bar (58 psi) - 16 bar (232 psi)	
Approved viscosity range of concentrate:	From 1 cP to max viscosity as defined in Max viscosity table below	
Factory tested pressure:	24 bar (348 psi)	
Burst pressure type tested:	64 bar (928 psi)	
Max inlet water flow rate: *Water flow is governed by the hydraulic calculation of the complete system and the available pressure loss over the FIREMIKS, see Pressure loss below.*	6000 lpm (1585 us gpm) @ 557 rpm (+/- 5 rpm) *(Note: Systems with dry piping at start-up are at risk of exceeding the maximum flow if no additional measures are taken. See IOM).*	
Min water flow rate with different concentrate viscosity and water inlet pressure: *Minimum water flow rate is the lowest water flow rate at which the dosing reaches the required 3% dosing. The minimum flow rate varies depending on water inlet pressure and viscosity properties of the concentrate. Once min flow is reached, correct dosing at higher flows is typically no longer sensitive to fluctuations in pressure. Below minimum flow, there is still dosing as long as the unit is rotating, just not the required 3%.*	**Viscosity/water inlet pressure:** 1-20 cP at 4 bar 1-20 cP at 8 bar 1-20 cP at 16 bar Max viscosity (see table below) at 16 bar.	**Min water flow:** 600 lpm (159 us gpm) 800 lpm (211 us gpm) 1100 lpm (291 us gpm) 1500 lpm (396 us gpm)
Suction height: *The pump has suction capability, but it is not recommended for safe operation. Suction requires priming of the pump and might lower dosing performance.*	0 meters (0 ft). Gravity feed and positive inlet pressure to the Dosing pump inlet required	
Operating temperature window:	Non-freezing (no solidification of fluids) temperature to +55 °C (131°F), not exceeding storage temperature limits	
Storage temperature window, dry conditions:	-30°C to 55°C (-22° to 131°F)	
Connections water motor: *Other connections available by using adaptors.*	**Standard:** ANSI/AWWA C 606-15 Cut groove 8" - DN 200 (219,1 mm).	**Optional:** - Integrated flanges 8" - DN 200 ANSI # 150 RF/FF or PN 16 (SS or Ni-Alu bronze)
Connection dosing pump inlet with Flap check valve:	Iso 228-1 G 3" female - DN 80	
Required* concentrate delivery hose/pipe dimensions and height: *To fulfill dosing performance at maximim viscosity. Recommended for all installations and viscosities.* **Unless the installation designer guarantees that there is positive pump inlet pressure under all operating conditions, (considering that non-newtonian concentrates are very difficult to calculate).*	Diameter size: **4" - DN 100 or larger** Total pipe/hose length without sharp bends: **4 meter or shorter** Gravity feed height (= lowest tank level height minus pump inlet height): **0,5 meter or higher**	
Maximum viscosity on concentrate allowed: *Important! These viscosity values shall not be exceeded in the whole temperature range where the proportioner will be used. Consult with provider of concentrate.* *See also connection requirements for dosing pump above.*	**Shear rate 1/s:** 5 10 20 50 100 600	**Viscosity (cP):** 7288 3942 2110 959 533 132

PRESSURE LOSS

Water flow rate:	Pressure loss @ 8 bar inlet pressure:
600 lpm	0,5 bar
1200 lpm	0,55 bar
2400 lpm	0,7 bar
3600 lpm	1,0 bar
4800 lpm	1,35 bar
6000 lpm	1,75 bar

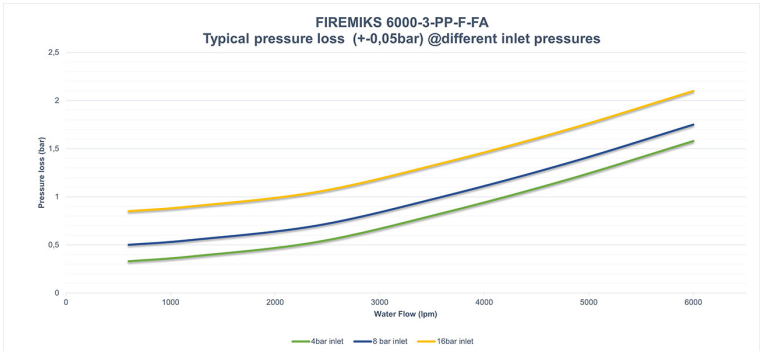

MATERIALS

Water motor housing and rotor material	Specification
- Aluminium:	Aluminium EN AW 6082-T6 (housing) / 7075-T6 (Rotor), Hard-anodized Tufram
- Bronze:	Nickel-Aluminium Bronze JM 7 (C95500)
Water motor components:	AISI 316 (fasteners), PET (vanes), NBR (O-rings), POM (inserts), ceramic (mech seals), AISI 420 (ball bearings)
Dosing pump head:	Standard head: Ni-plated Brass
Dosing pump components:	Aluminium, ceramics, NBR, AISI 316 (fasteners)
Fittings:	High grade Stainless steel
Valves and flexible hoses:	High grade Stainless steel + PTFE

APPROXIMATE DIMENSIONS AND WEIGHT

Overall dim. L x W x H mm:	1550 x 760 x 830
FIREMIKS 6000-3-PP-F-FA-ALU	285 kg
FIREMIKS 6000-3-PP-F-FA-BRZ	522 kg

Actual dimensions and weight depending on optional equipment.

PRINCIPLE FLOW CHART

- NOT INCLUDED WITH FIREMIKS
- OPTIONAL EQUIPMENT
- WATER
- CONCENTRATE
- WATER/CONCENTRATE SOLUTION

1. Water motor
2. Dosing pump
3. Drive gear
4. Selector valve: Dosing/Flushing
5. Air relief valve (Manual)
6. Check valve Dosing line
7. Filter Flushing line
8. Drain valve
10. Flap check valve

22a. Optional - Dosing/Return valve (DRV) +
22b. Presure Relief valve (PRV)

40. For example: Nozzles/Monitors/Deluge systems

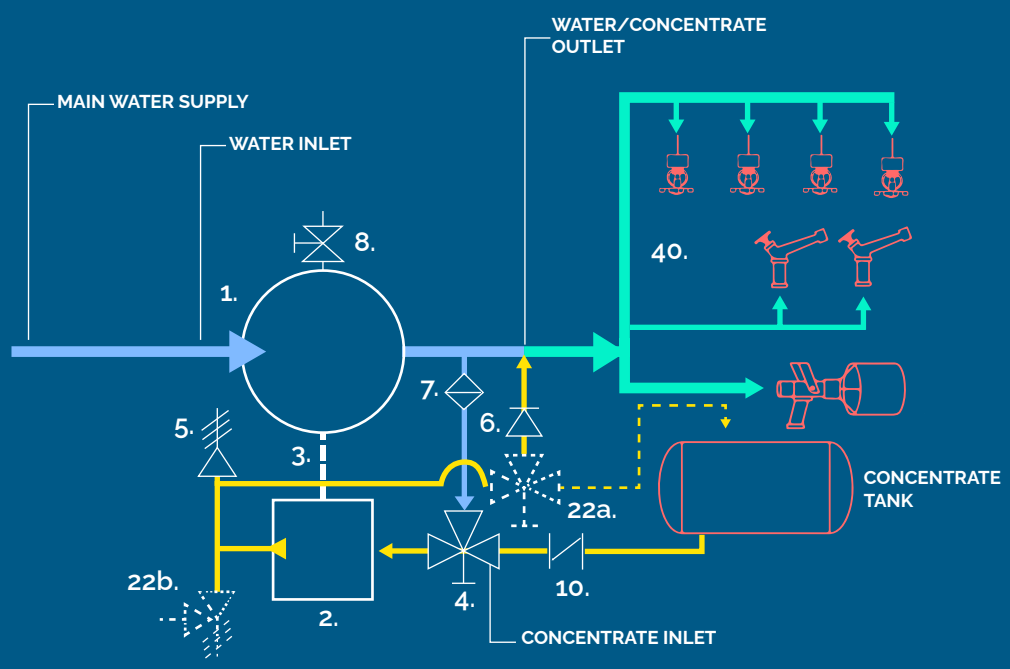

N.B. Reverse water flow direction is optional.

MAIN PARTS OVERVIEW

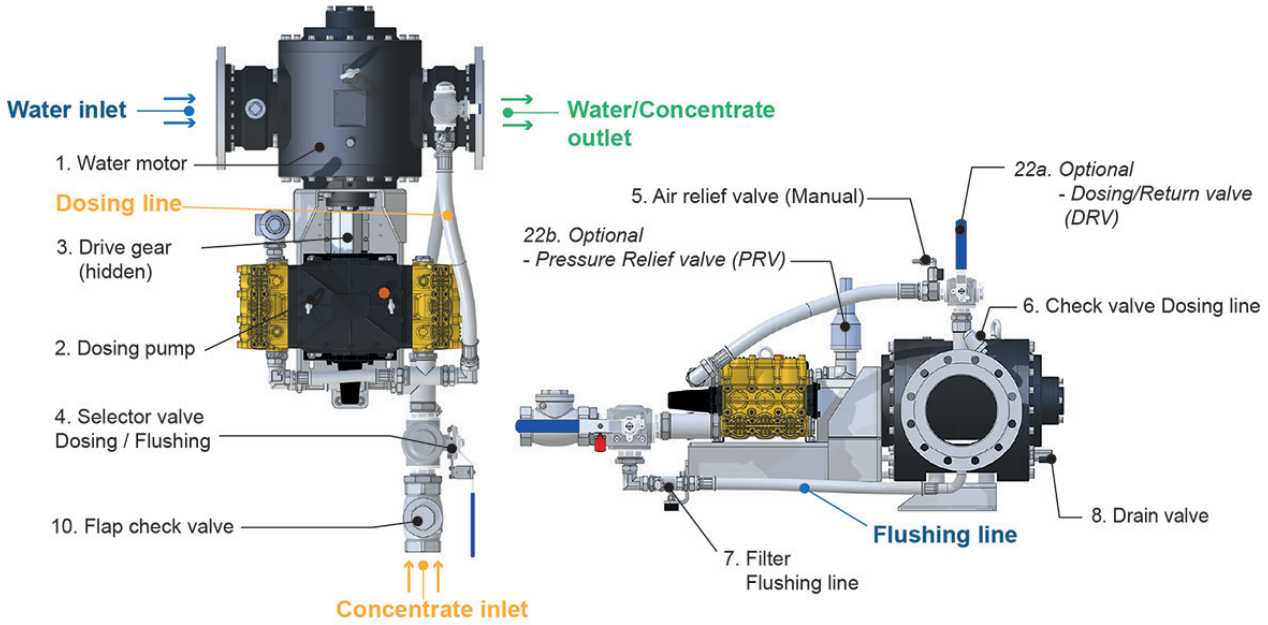

RECOMMENDED SPARE PARTS FOR 2 – 5 YEARS

Water motor parts:	Dosing pump parts:	Complete unit parts:
1.10 Set of vane plates (4 pcs)	2.10 Water seals and plunger kit	3.11 Manual Air relief valve
1.20 Set of Mechanical Seals (2 pcs)	2.20 In/Out valve kit	3.20 Check valve
1.30 Set of Ball Bearings (2 pcs)		3.30 Complete Drive gear + Wedges
1.40 Set of O-rings (8 pcs)		3.40 Filter flushing line
1.45 Set of Gable inserts (2 pcs)		

Always mention the serial number of the units concerned when ordering spare parts.

OPTIONAL FEATURES / ITEMS

Features / Items:	Description:
Reversed water flow direction (right to left) or Vertical flow direction (upwards or downwards)	Standard flow direction is from left to right seen from pump side.
Dosing/Return valve (DRV) iso 228-1 G 1 1/4" (1,25") female - DN 32	Valve for returning the concentrate to the tank, for easy and quick checking of dosing rate, without consuming concentrate and without and generating water/foam solution. Including Pressure relief valve (PRV) set at 20 bar to avoid over-pressure, in case the return line is blocked for discharge for any reason.
Adaptors for Water motor connections	Flanges (ANSI, DIN), Storz couplings, etc.
Y-strainer	If the firefighting water contains foreign/solid particles a strainer in the main water line before the FIREMIKS is a necessity.

FIREMIKS® is a registered trademark owned by Firemiks AB in Sweden.
Firemiks AB is SS-EN ISO-9001:2015 certified by Bureau Veritas.
Scope of supply: Development, production and sales of water motor driven dosing systems for firefighting.
CE FIREMIKS® is CE-marked and production is made according to European Directive 2006/42/EC.
Conforms to applicable parts of NFPA 11 and NFPA 1901.
We reserve the right to make changes in the specifications without prior notice.

FM APPROVED

ISO 9001 BUREAU VERITAS Certification

Firemiks AB | Sweden | VAT.no SE 556799500501
Phone +46-8-551 196 10 | info@firemiks.com | **www.firemiks.com**
SS-EN ISO 9001 :2015 Certified by Bureau Veritas